GENERAL NOTES:

1. ALL ITEMS SHOWN IN RED TO BE REMOVED.
   - BOLT DOWN HATCHES, IWO DOUBLER, AND ASSOCIATED LADDER TO BE RELOCATED AFT.
2. DOUBLER PLATE, HALF INCH, TO BE ADDED TO BOW. PERIMETER AND JOINTS IN DOUBLER PLATE SHALL FULLY WELDED. PLUG WELDS ARE LONGITUDINAL AND ALINE WITH UNDERLYING DECK STRUCTURE.
3. ALL RECESSED TIE DOWNS TO BE REMOVED (20).
4. MAIN DECK, BETWEEN FRAMES 5 AND 14 TO BE EXAMINED AND REPLACED WHERE WASTED EXCEEDS 20%
5. ALL DECK PLATE PATCHES SHALL CROSS TWO STIFFENERS, PLUS 6" BEYOND, AND HAVE A MIN. WIDTH OF 18".

REVISIONS

REV No.	DESCRIPTION	BY	DATE
1	ADDED PAD EYE DETAIL. REVISED CONCRETE PAD SIZE	BTJ	1/27/2023
2	REVISED D-RING LOCATIONS PER OPERATOR COMMENTS	BTJ	2/6/2023

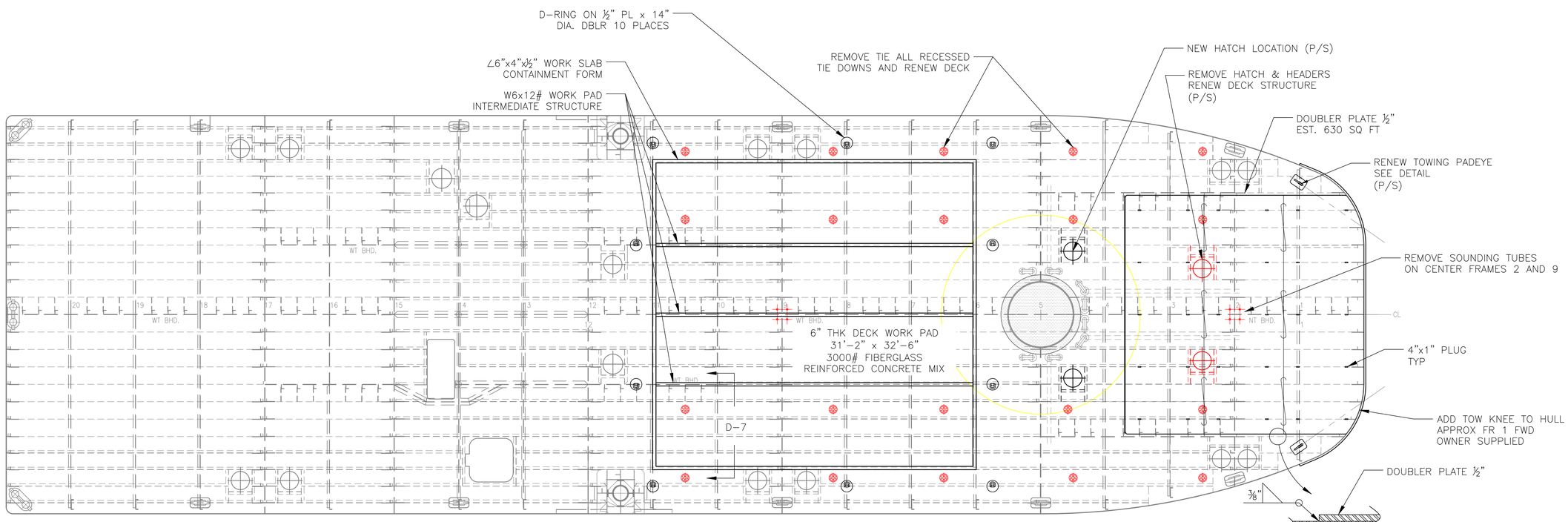

MAIN DECK STRUCTURE

⅜" PL w/ 5" x 3" x 5/16" ∠

BOW DOUBLER

WELD DETAIL NTS

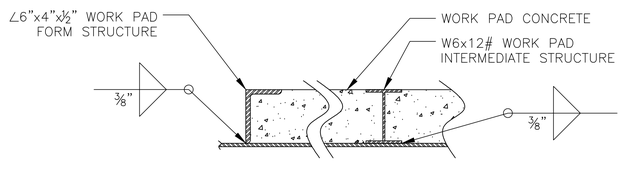

SECTION D-7

WORK PAD STRUCTURE WELDS NTS

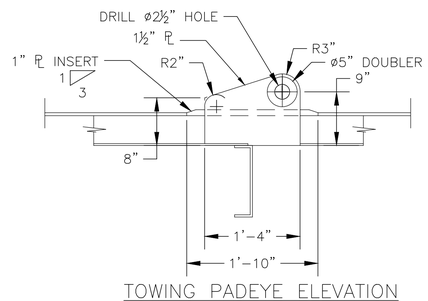

TOWING PADEYE ELEVATION

SCALE: 1" = 1'-0"

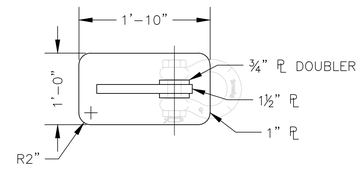

TOWING PADEYE DETAIL

SCALE: 1" = 1'-0"

NORTH CAROLINA FERRY SYSTEM
8550 SHIPYARD RD MANNS HARBOR, NC 27953

NORTH CAROLINA DEPARTMENT OF TRANSPORTATION
FERRY DIVISION
139'-6" x 40' x 9"

MAIN DECK STRUCTURE MODIFICATIONS

DWG BY:	APPROVED BY:	SIZE	PROJECT NO.	DWG NO.	REV
BTJ	JJM	D	X	NC-140-03B	2
DATE: JAN. 26, 2023	DATE APPROVED:	SCALE: 3/16" = 1'-0"			SHEET: 1 OF 1

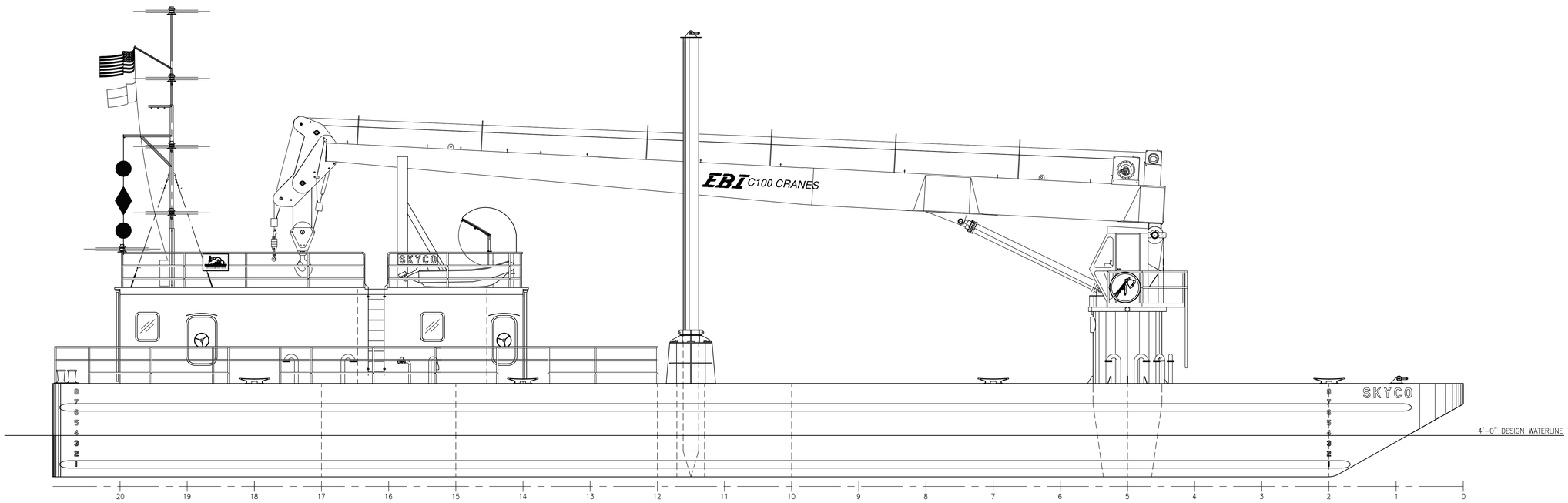

VESSEL CHARACTERISTICS

LOA	136'-6"
BREATH	40'-0"
DEPTH	9'-0"
DESIGN DRAFT	3'-0"
LT SHIP WT.	292 LTSW @ 2'-0" DRAFT
DISPLACEMENT	146 LTSW/FT. TRIM
FUEL CAPACITY	5,000 GAL./119 BBLS. (16.47 LT)
POT. WATER	5,000 GAL. (17.86 LT.)
BALLAST CAPACITY	150 LTSW
CRANE CAPACITY	50 TONS @ 16'-0"/10 TONS @ 80'-0"
DECK LOADING	600 LBS./SQ. FT.

REV.	DESCRIPTION	DATE	APPROVED BY
	REVISIONS		

NORTH CAROLINA FERRY SYSTEM
8550 SHIPYARD RD. MANNS HARBOR, NC 27953

NORTH CAROLINA DEPARTMENT OF TRANSPORTATION
FERRY DIVISION

136'-6" x 40' x 9' CRANE BARGE

OUTBOARD PROFILE

DWG. BY:	APPROVED BY:	SIZE	PROJECT NO.	DWG NO.	REV
JD WALDREP	DON CHAPMAN	D	078	NC-140-01	-
DATE: APRIL 19, 2006	DATE APPROVED:	SCALE 3/16"=1'-0"		SHEET 1 OF 1	

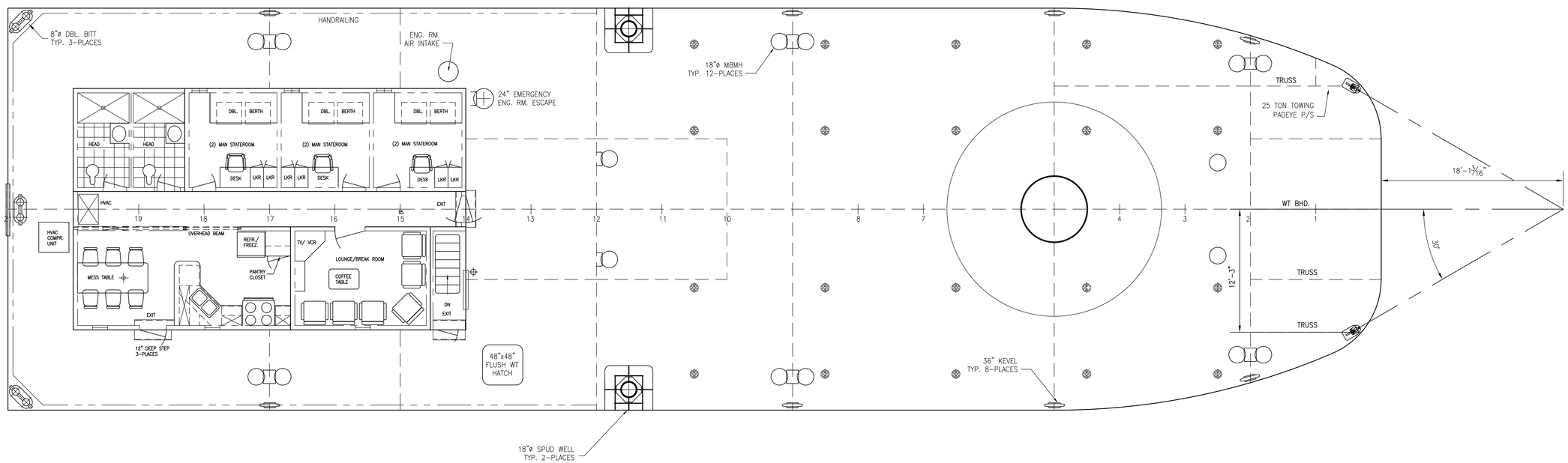

MAIN DECK ARRANGEMENT

REV.	DESCRIPTION	DATE	APPROVED BY
11a	REVISED GALLEY LAYOUT	4-30-08	WALDREP
10a	REVISED DECK FITTING & PIPING LAYOUT	12-19-07	WALDREP
9b	RELOCATED SPUD WELLS TO CLEAR CRANE.	4-10-07	WALDREP
9a	REVISED BOW SHAPE TO MATCH FERRIES.	4-10-07	WALDREP
8a	MOVED KEVELS @ FR 12 PORT & STBD AFT TO FR 14.	12-11-06	CAPEHART
7c	UPDATED SPUD WELLS.	11-08-06	CAPEHART
7b	ADDED HALF SECT OF PIPE TO SUIT LINE HANDLING WHERE SHELL PLATING MODIFIED.	11-08-06	CAPEHART
7a	MODIFIED SHELL PLATING TO REDUCE AMOUNT OF BENT PLATE REQUIRED FOR HULL.	11-08-06	CAPEHART
6a	ADDED DOOR AT GALLEY FOR SECOND ESCAPE & REARRANGED GALLEY/MESS AREA.	9-20-06	CAPEHART
5b	ADDED VENTS AT CRANE PEDESTAL & MOVED AFT SPUDS FWD. ON FRAME..	9-5-06	CAPEHART
5a	RE-ARRANGED GALLEY,BREAKROOM & INSERTED UPDATED CRANE LAYOUT.	9-5-06	CAPEHART
4b	ADDED TOOLROOM CONTAINER ON MAINDECK.	6-01-06	WALDREP
4a	RELOCATED MSD UNIT TO MACHINERY SPACE & ADDED WASHER/DRYER IN MACH. SPACE.	6-01-06	WALDREP
3a	CHANGED ARRANGEMENT IN STATEROOMS & RELOCATED WT DOOR TO BHD. 14..	5-23-06	WALDREP
2c	MODIFIED MACHINERY LAYOUT TO CLEAR STAIRS AND STANCHIONS.	5-17-06	WALDREP
2b	MODIFIED LIVING QUARTERS LAYOUT & RELOCATED SPUDS.	5-17-06	WALDREP
2a	RELOCATED DECKHOUSE TO MOVE INCLINED STAIRWAY IN ER & ADD MSD UNIT AFT.	5-17-06	WALDREP
1	CHANGED CRANE TO PEDESTAL TYPE & REMOVED ONE LONG'L. BHD.	4-19-06	WALDREP

REVISIONS

NORTH CAROLINA FERRY SYSTEM
113 ARENDELL STREET MOREHEAD CITY, NC. 28557

NORTH CAROLINA DEPARTMENT OF TRANSPORTATION
FERRY DIVISION

136'-6" x 40' x 9' CRANE BARGE
MAIN DECK & HOLD
ARRANGEMENTS

DWG. BY:	APPROVED BY:	SIZE	PROJECT NO.	DWG NO.	REV
JOE WALDREP	DON CHAPMAN	D	078	NC-140-02	11
DATE: APRIL 19, 2006	DATE APPROVED:	SCALE 3/16"=1'-0"			SHEET 1 OF 2

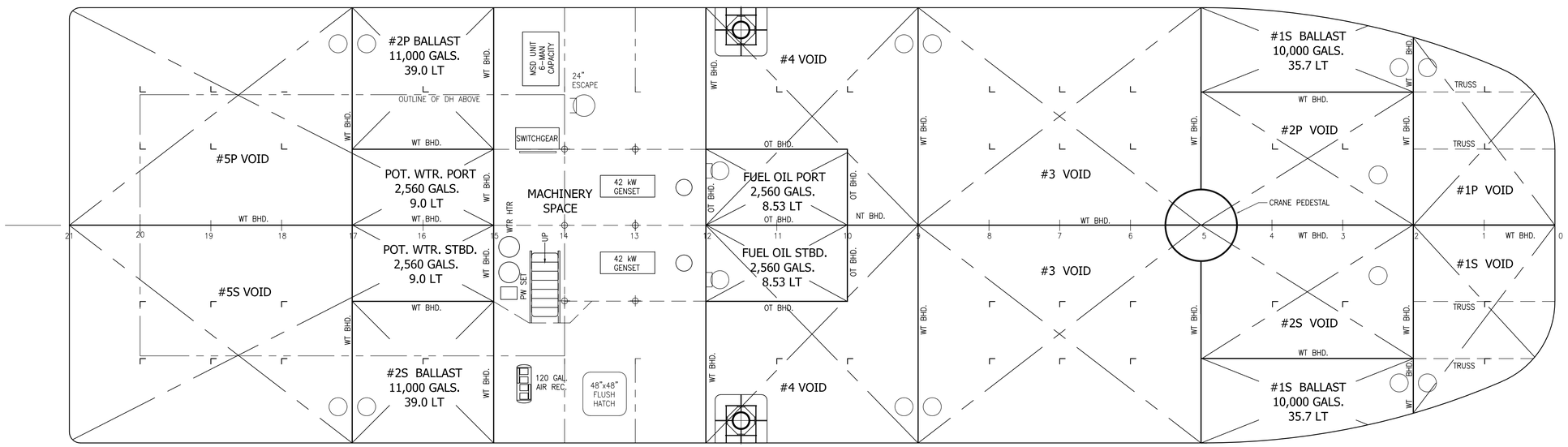

HOLD PLAN

REV.	DESCRIPTION	DATE	APPROVED BY
11a	REVISED GALLEY LAYOUT	4-30-08	WALDREP
10a	REVISED DECK FITTING & PIPING LAYOUT	12-19-07	WALDREP
9b	RELOCATED SPUD WELLS TO CLEAR CRANE.	4-10-07	WALDREP
9a	REVISED BOW SHAPE TO MATCH FERRIES.	4-10-07	WALDREP
8a	MOVED KEVELS @ FR 12 PORT & STBD AFT TO FR 14.	12-11-06	CAPEHART
7c	UPDATED SPUD WELLS.	11-08-06	CAPEHART
7b	ADDED HALF SECT OF PIPE TO SUIT LINE HANDLING WHERE SHELL PLATING MODIFIED.	11-08-06	CAPEHART
7a	MODIFIED SHELL PLATING TO REDUCE AMOUNT OF BENT PLATE REQUIRED FOR HULL.	11-08-06	CAPEHART
6a	ADDED DOOR AT GALLEY FOR SECOND ESCAPE & REARRANGED GALLEY/MESS AREA.	9-20-06	CAPEHART
5b	ADDED VENTS AT CRANE PEDESTAL & MOVED AFT SPUDS FWD. ON FRAME..	9-5-06	CAPEHART
5a	RE-ARRANGED GALLEY,BREAKROOM & INSERTED UPDATED CRANE LAYOUT.	9-5-06	CAPEHART
4b	ADDED TOOLROOM CONTAINER ON MAINDECK.	6-01-06	WALDREP
4a	RELOCATED MSD UNIT TO MACHINERY SPACE & ADDED WASHER/DRYER IN MACH. SPACE.	6-01-06	WALDREP
3a	CHANGED ARRANGEMENT IN STATEROOMS & RELOCATED WT DOOR TO BHD. 14..	5-23-06	WALDREP
2c	MODIFIED MACHINERY LAYOUT TO CLEAR STAIRS AND STANCHIONS.	5-17-06	WALDREP
2b	MODIFIED LIVING QUARTERS LAYOUT & RELOCATED SPUDS.	5-17-06	WALDREP
2a	RELOCATED DECKHOUSE TO MOVE INCLINED STAIRWAY IN ER & ADD MSD UNIT AFT.	5-17-06	WALDREP
1	CHANGED CRANE TO PEDESTAL TYPE & REMOVED ONE LONG'L. BHD.	4-19-06	WALDREP

REVISIONS

NORTH CAROLINA FERRY SYSTEM
113 ARENDELL STREET MOREHEAD CITY, NC. 28557

NORTH CAROLINA DEPARTMENT OF TRANSPORTATION
FERRY DIVISION

136'-6" x 40' x 9' CRANE BARGE
MAIN DECK & HOLD
ARRANGEMENTS

DWG. BY:	APPROVED BY:	SIZE	PROJECT NO.	DWG NO.	REV
JOE WALDREP	DON CHAPMAN	D	078	NC-140-02	11
DATE: APRIL 19, 2006	DATE APPROVED:	SCALE 3/16"=1'-0"			SHEET 2 OF 2

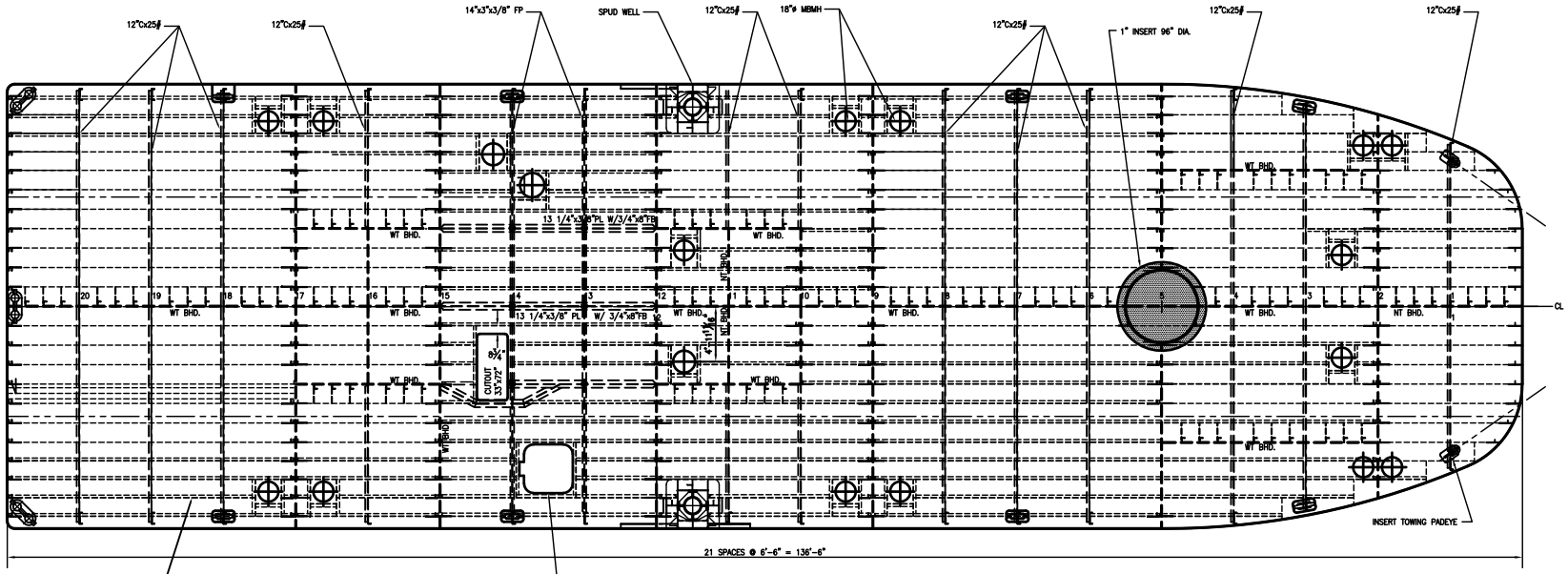

DECK STRUCTURE

DECK PLATE 3/8" W/ 5"x3"x5/16"L

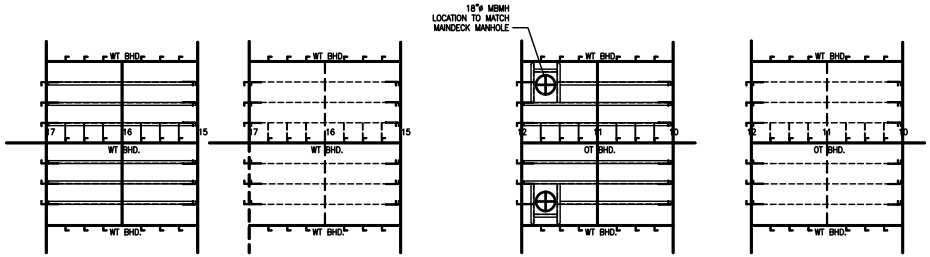

PW TANK TOP

PLATE 5/16" W/ 5"x3"x5/16"L

PW TANK BOTTOM

PLATE 5/16" W/ 5"x3"x5/16"L

FO TANK TOP

PLATE 5/16" W/ 5"x3"x5/16"L

FO TANK BOTTOM

PLATE 5/16" W/ 5"x3"x5/16"L

REV.	DESCRIPTION	DATE	APPROVED BY

REVISIONS

NORTH CAROLINA FERRY SYSTEM

NORTH CAROLINA DEPARTMENT OF TRANSPORTATION
FERRY DIVISION

136'-6" x 40' x 9' CRANE BARGE

MAIN DECK STRUCTURE

DRN. BY:	APPROVED BY:
JR WALDROP	DON CHAPMAN
DATE: APRIL 10, 2000	DATE APPROVED:

SIZE	PROJECT NO.	DWG NO.	REV
D	078	NC-140-03	A

SCALE 3/16"=1'-0" SHEET 1 OF 1

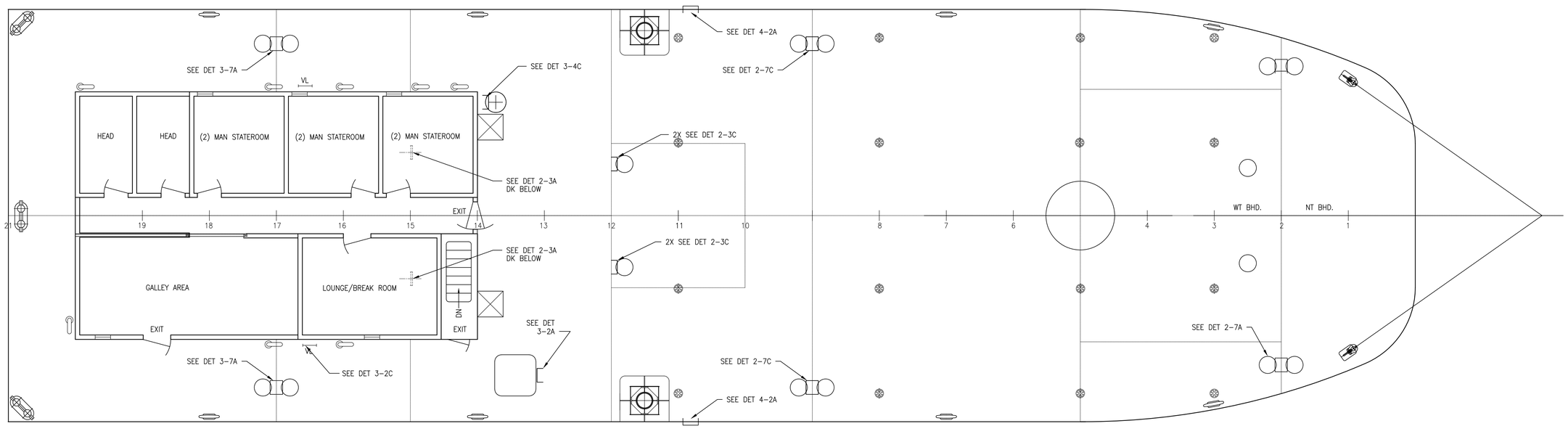

PLAN 1-4A

MAIN DECK LADDER ARRANGEMENT

NORTH CAROLINA FERRY SYSTEM
113 ARENDELL STREET MOREHEAD CITY, NC. 28557

NORTH CAROLINA DEPARTMENT OF TRANSPORTATION
FERRY DIVISION

136'-6" x 40' x 9' CRANE BARGE
VERTICAL AND INCLINED
LADDER DETAILS

DWG. BY:	APPROVED BY:	SIZE	PROJECT NO.	DWG NO.	REV
JOE WALDREP	DON CHAPMAN	D	078	NC-140-11	A
DATE: APRIL 19, 2006	DATE APPROVED:	SCALE 3/16"=1'-0"			SHEET 1 OF 6

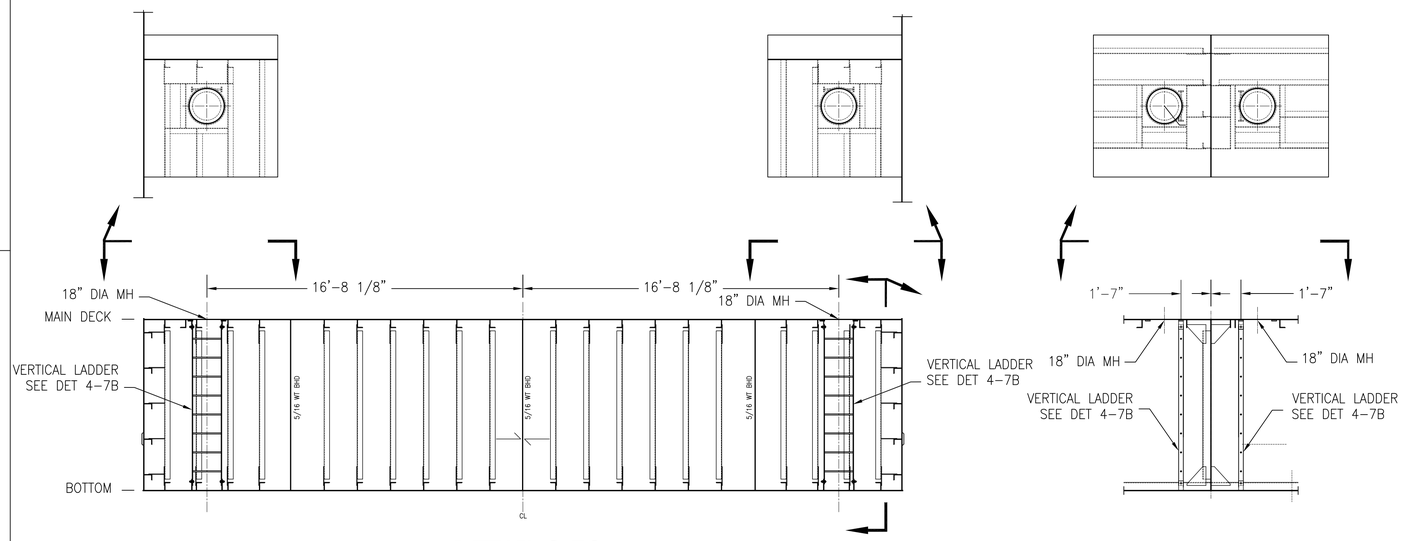

DETAIL 2-7C

VERTICAL LADDERS TRANSVERSE BHD #9 LOOKING FWD

(1-4A)

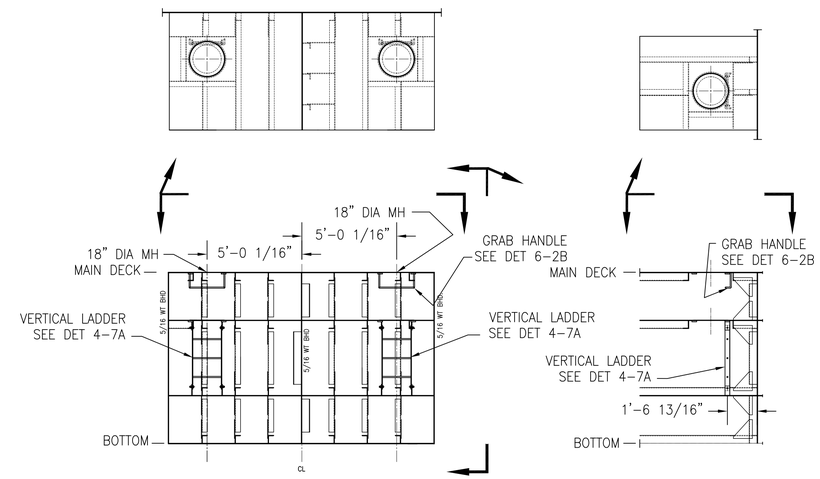

DETAIL 2-3C

VERTICAL LADDERS TRANSVERSE BHD #12 LOOKING FWD

(1-4A)

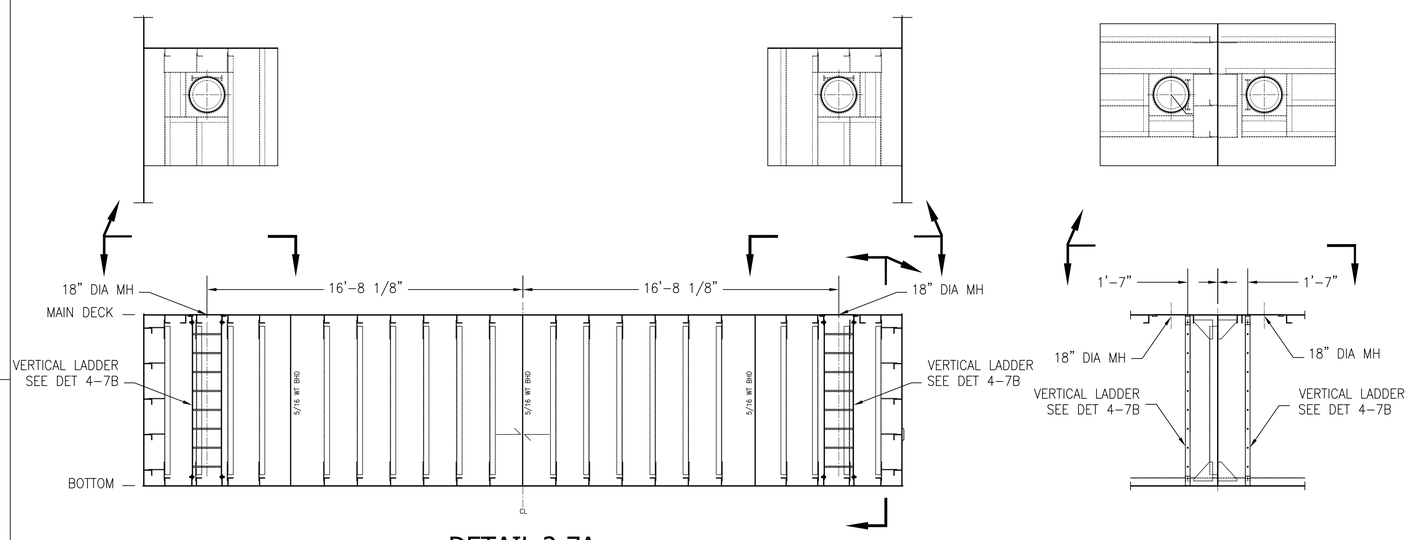

DETAIL 2-7A

VERTICAL LADDERS TRANSVERSE BHD. #2 LOOKING FWD

(1-4A)

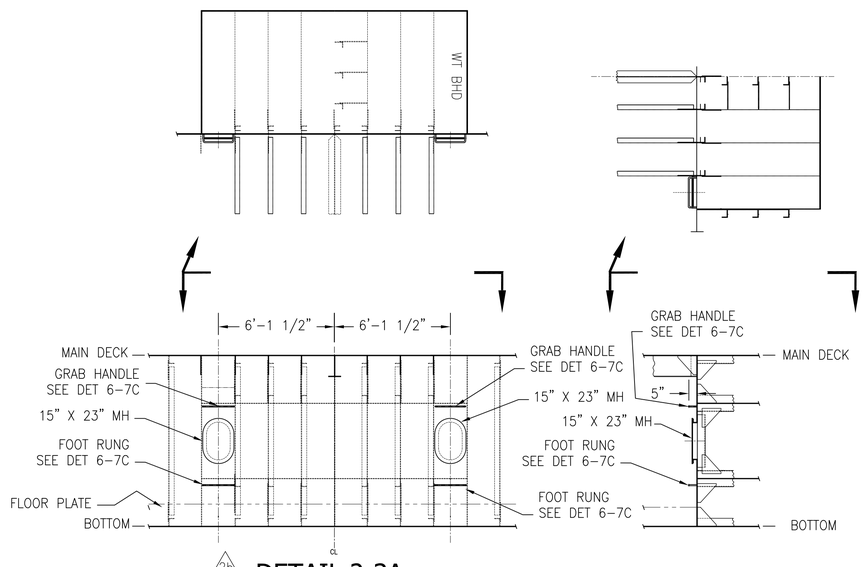

2b

DETAIL 2-3A

VERTICAL LADDERS TRANSVERSE BHD. #15 LOOKING AFT

(1-4A)

NORTH CAROLINA FERRY SYSTEM
113 ARENDELL STREET MOREHEAD CITY, NC. 28557

DWG. BY: JOE WALDREP	APPROVED BY:
DATE: AUG. 30, 2005	DATE APPROVED:

NORTH CAROLINA DEPARTMENT OF TRANSPORTATION
FERRY DIVISION

136'-6" x 40' x 9' CRANE BARGE
VERTICAL AND INCLINED
LADDER DETAILS

SIZE	PROJECT NO.	DWG NO.	REV
D	078	NC-140-11	A

SCALE 1/4"=1'-0" SHEET 2 OF 6

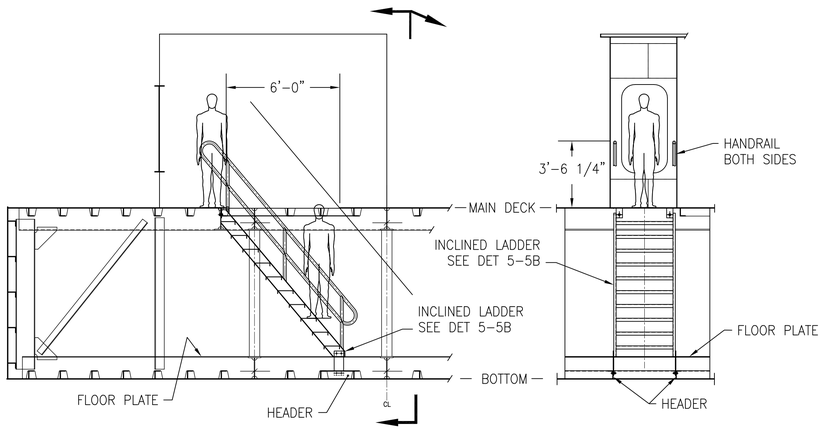

DETAIL 3-7C

VERTICAL LADDERS TRANSVERSE FR #14 LOOKING AFT

(1-4A)

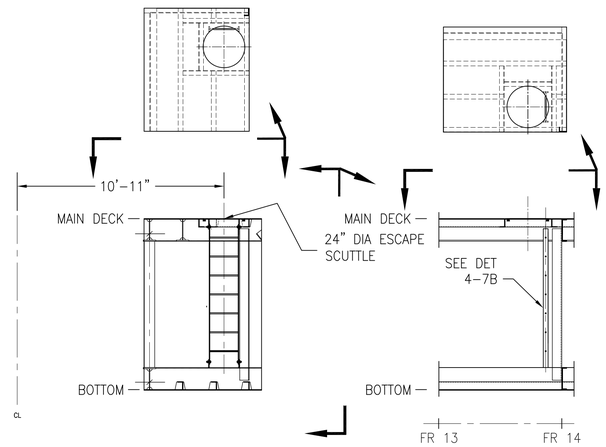

DETAIL 3-4C

VERTICAL LADDERS TRANSVERSE FR #14 LOOKING AFT

(1-4A)

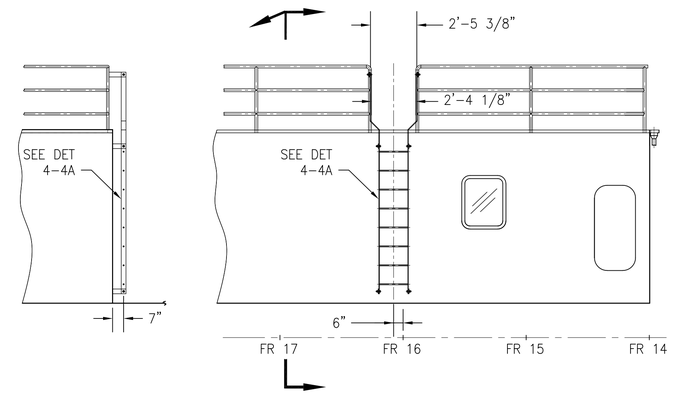

DETAIL 3-2C

VERTICAL LADDERS DECKHOUSE SIDES LOOKING INBD

(1-4A)

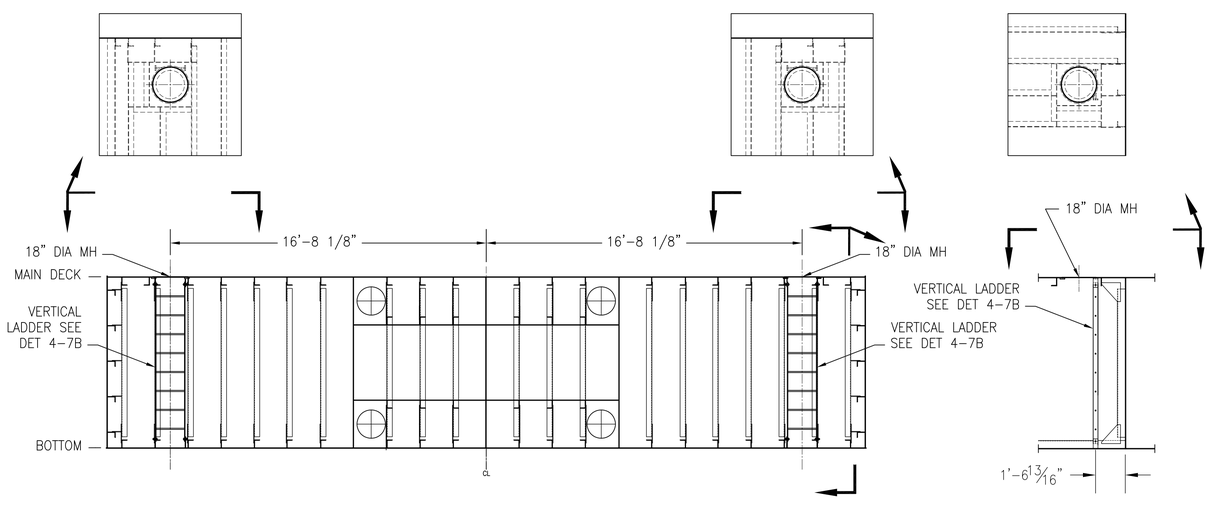

DETAIL 3-7A

VERTICAL LADDERS TRANSVERSE BHD. #17 LOOKING FWD

(1-4A)

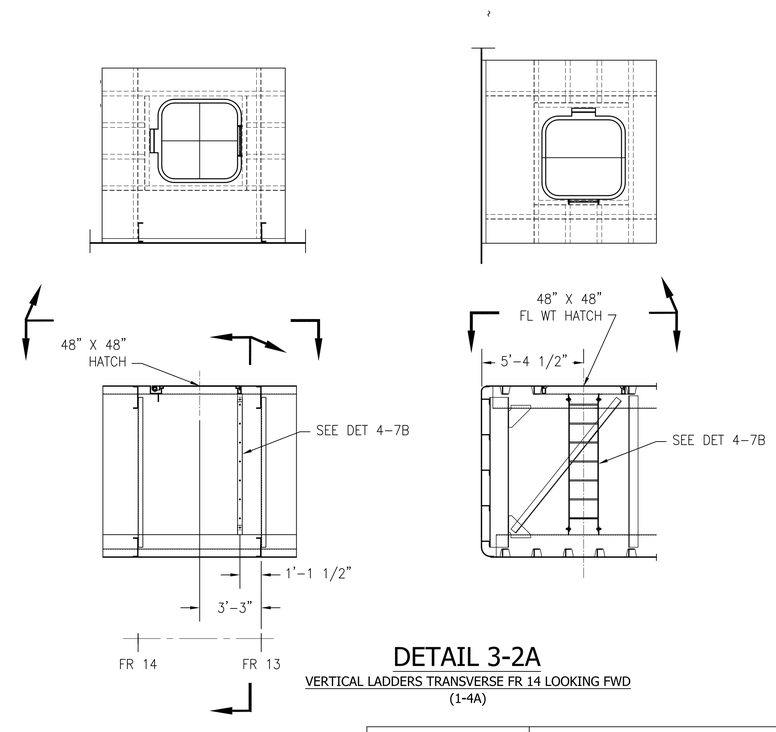

DETAIL 3-2A

VERTICAL LADDERS TRANSVERSE FR 14 LOOKING FWD

(1-4A)

NORTH CAROLINA FERRY SYSTEM
113 ARENDELL STREET MOREHEAD CITY, NC. 28557

NORTH CAROLINA DEPARTMENT OF TRANSPORTATION
FERRY DIVISION

136'-6" x 40' x 9' CRANE BARGE
VERTICAL AND INCLINED
LADDER DETAILS

DWG. BY:	APPROVED BY:	SIZE	PROJECT NO.	DWG NO.	REV
JOE WALDREP		D	078	NC-140-11	A
DATE: AUG. 30, 2005	DATE APPROVED:	SCALE 1/4"=1'-0"			SHEET 3 OF 6

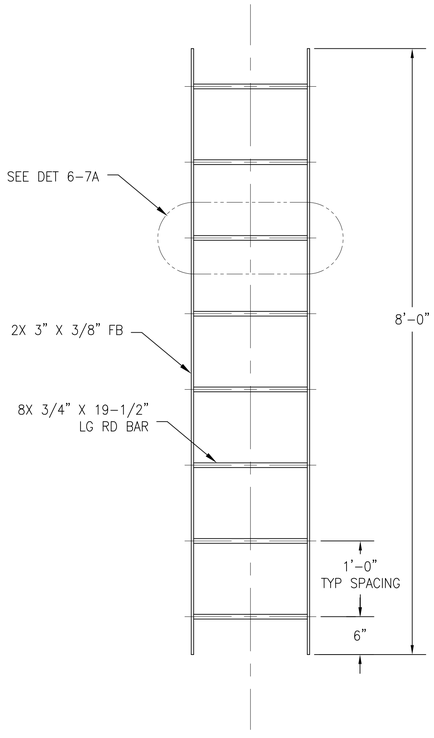

DETAIL 4-7B

TOTAL REQUIRED (18)

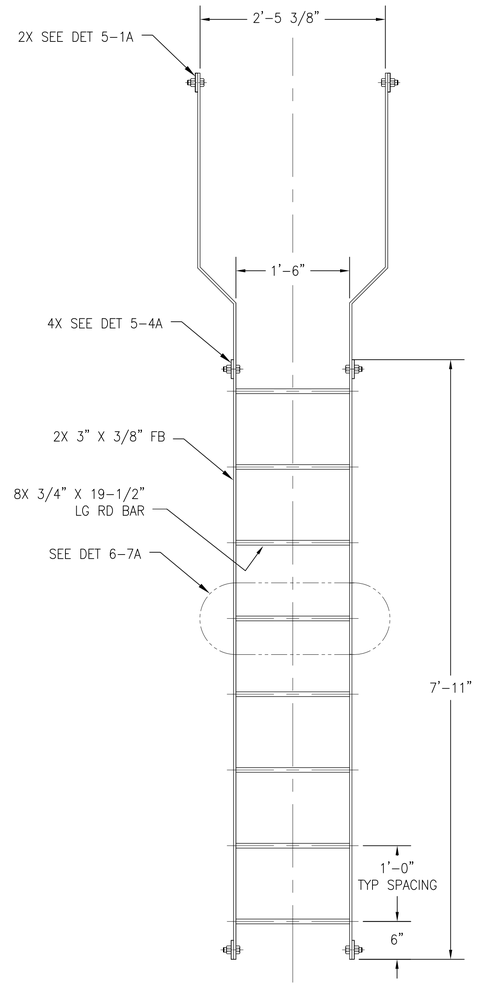

DETAIL 4-4A

TOTAL REQUIRED (2)

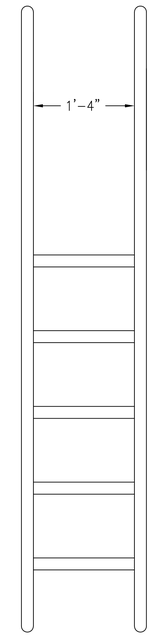

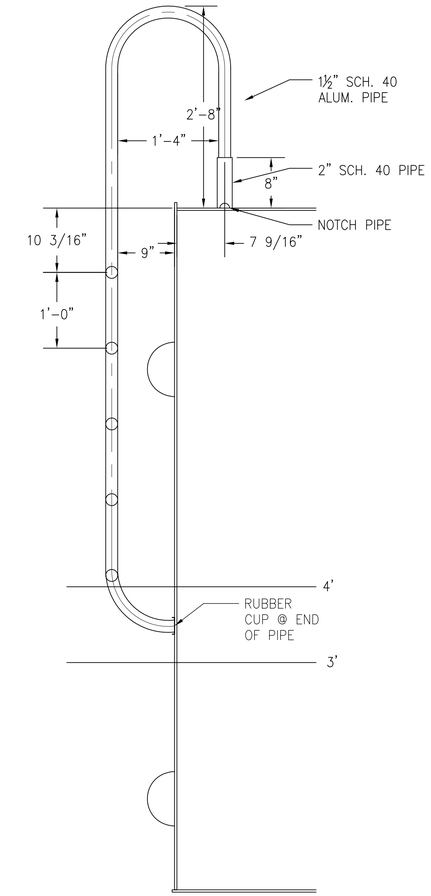

DETAIL 4-2A

NORTH CAROLINA FERRY SYSTEM
113 ARENDELL STREET MOREHEAD CITY, NC. 28557

NORTH CAROLINA DEPARTMENT OF TRANSPORTATION
FERRY DIVISION

136'-6" x 40' x 9' CRANE BARGE
VERTICAL AND INCLINED
LADDER DETAILS

DWG. BY:	APPROVED BY:	SIZE	PROJECT NO.	DWG NO.	REV
C.D. CAPEHART JR.	X	D	078	NC-140-11	A
DATE: X	DATE APPROVED:	SCALE 1"=1'-0"			SHEET 4 OF 6

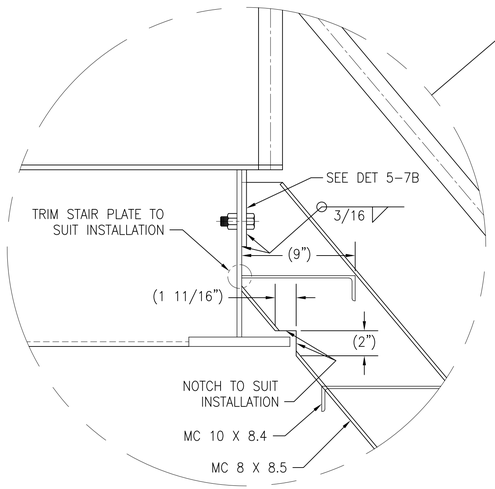

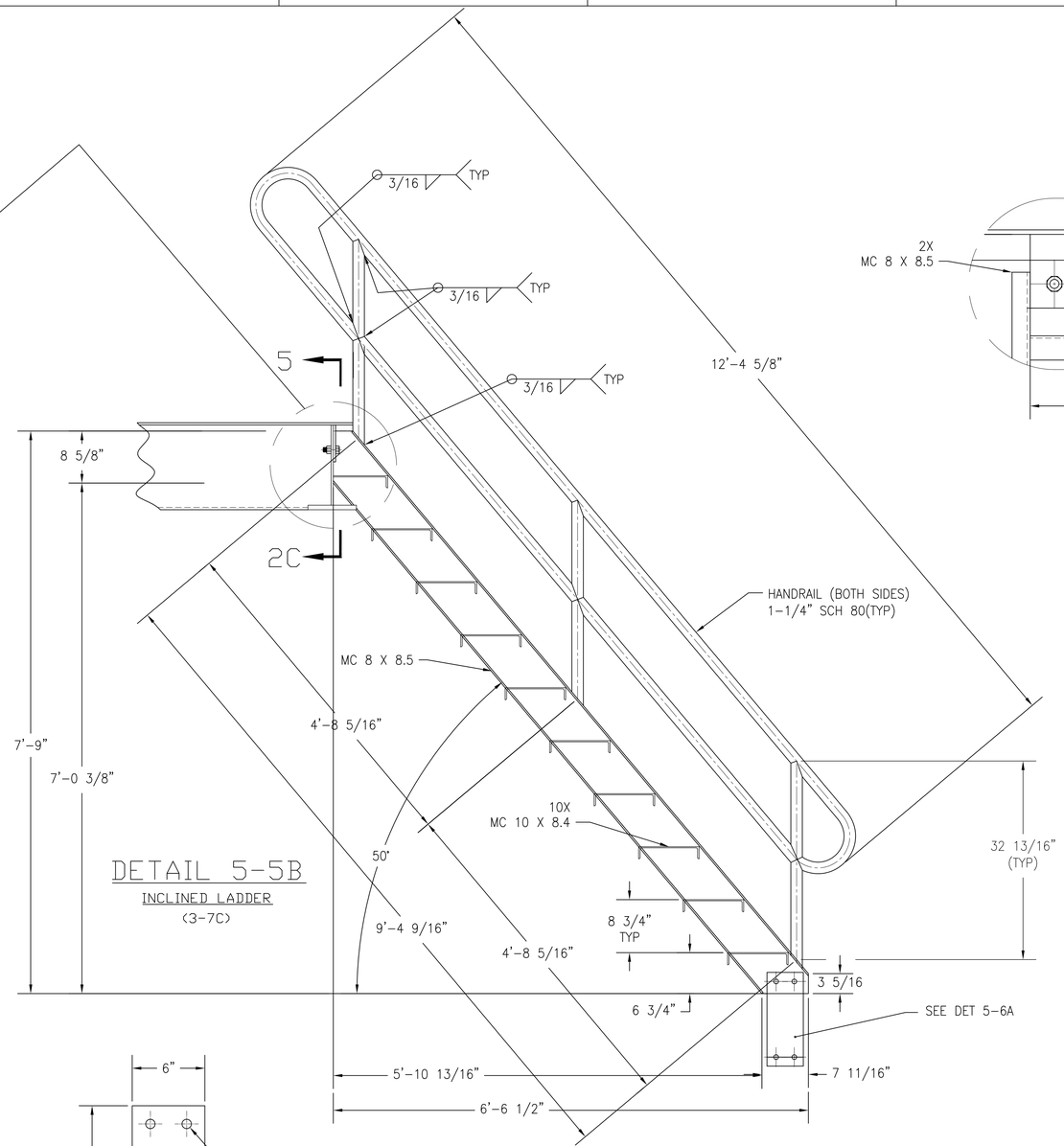

DETAIL 5-5B

INCLINED LADDER

(3-7C)

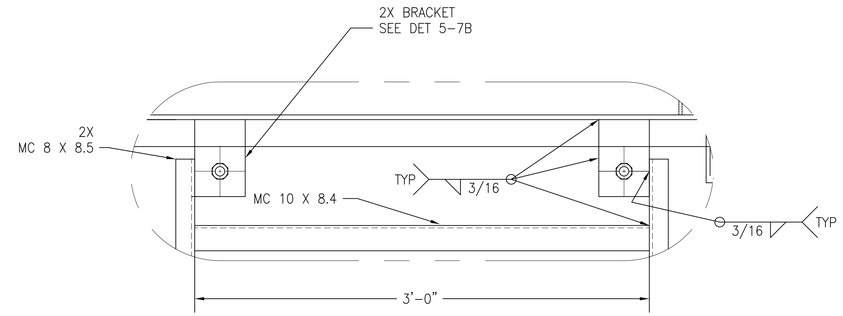

DETAIL 5-2C

SCALE: 2:1

(5-5B)

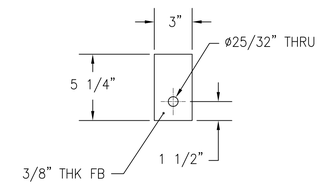

DETAIL 5-1B

BRACKET

SCALE: 2:1

(4-7A), (4-7B)

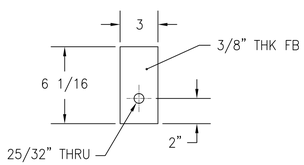

DETAIL 5-7B

BRACKET

SCALE: 2:1

(5-5B)

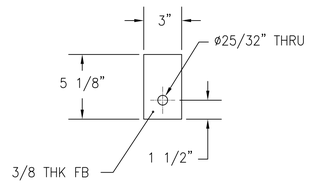

DETAIL 5-2A

BRACKET

SCALE: 2:1

(4-6B)

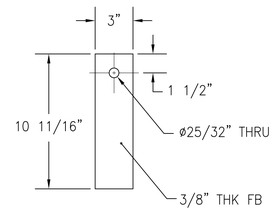

DETAIL 5-1A

BRACKET

SCALE: 2:1

(4-4A)

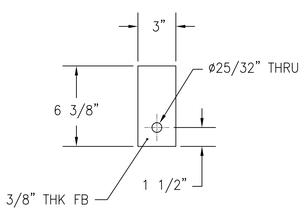

DETAIL 5-8A

BRACKET

SCALE: 2:1

(4-2B)

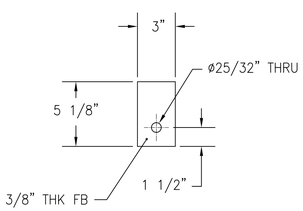

DETAIL 5-7A

BRACKET

SCALE: 2:1

(4-2B)

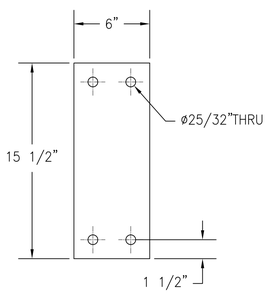

DETAIL 5-6A

BRACKET

SCALE: 2:1

(5-5B)

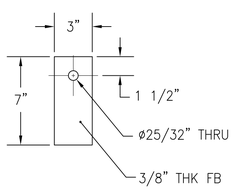

DETAIL 5-5A

BRACKET

SCALE: 2:1

(4-6A), (4-7A), (4-7B)

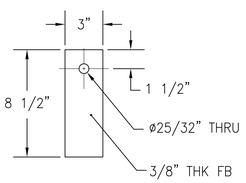

DETAIL 5-4A

BRACKET

SCALE: 2:1

(4-4A)

NORTH CAROLINA FERRY SYSTEM
113 ARENDELL STREET MOREHEAD CITY, NC. 28557

NORTH CAROLINA DEPARTMENT OF TRANSPORTATION
FERRY DIVISION

136'-6" x 40' x 9' CRANE BARGE
VERTICAL AND INCLINED
LADDER DETAILS

DWG. BY:	APPROVED BY:	SIZE	PROJECT NO.	DWG NO.	REV
C.D. CAPEHART JR.	J.D. WALDREP	D	078	NC-140-11	A
DATE: JULY XX, 2006	DATE APPROVED:	SCALE 1"=1'-0"			SHEET 5 OF 6

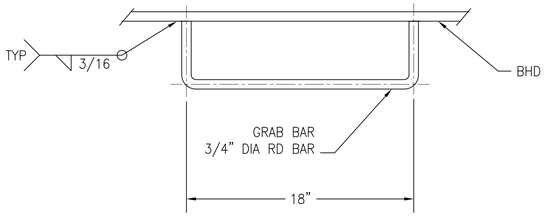

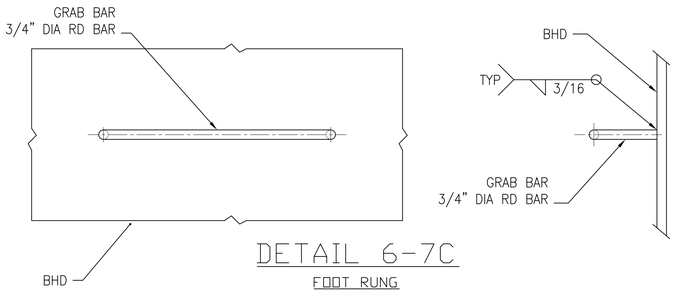

DETAIL 6-7C

FOOT RUNG

SCALE: 2:1

(2-3A)

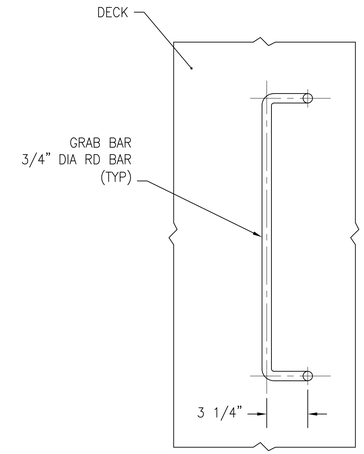

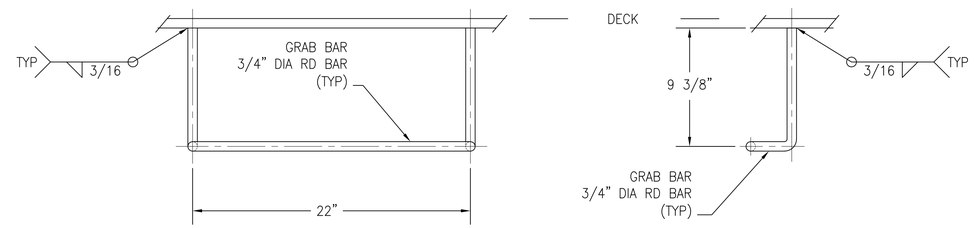

DETAIL 6-2B

GRAB BAR

SCALE: 2:1

(2-3C)

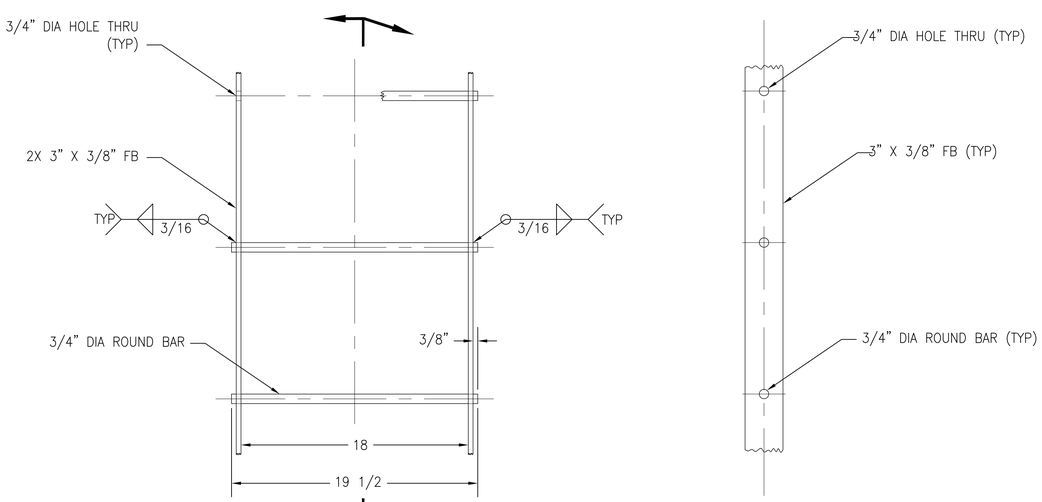

DETAIL 6-7A

TYP LADDER DETAIL

SCALE: 2:1

(SH 4)

NORTH CAROLINA FERRY SYSTEM

113 ARENDELL STREET MOREHEAD CITY, NC. 28557

NORTH CAROLINA DEPARTMENT OF TRANSPORTATION

FERRY DIVISION

136'-6" x 40' x 9' CRANE BARGE

VERTICAL AND INCLINED LADDER DETAILS

DWG. BY:	APPROVED BY:	SIZE	PROJECT NO.	DWG NO.	REV
C.D. CAPEHART JR.	J.D. WALDREP	D	078	NC-140-11	A
DATE: x	DATE APPROVED:	SCALE 1"=1'-0"			SHEET 6 OF 6

NO	QTY	DESCRIPTION	MANUFACTURER	MODEL NO	LOCATION	SIZE	HOLE CUT			SILL HEIGHT	MATERIAL	MATL THK	SWING	REMARKS
							WIDTH	LENGTH	DIAMETER					
1	1	26" X 54" WT TIGHT DOOR	CEN-TEX MARINE	104 RH	DECK HOUSE @ FR 14 1/4 STBD	26" X 54"	26 1/4"	54 1/4"	–	22"	STEEL	X	RH	
2	2	INTERIOR JOINER DOOR	–	–	DECK HOUSE @ FR 15 PORT, FR 16 STBD AND FR 18 PORT	28"	–	–	–	–	WOOD	–	LH	
3	3	INTERIOR JOINER DOOR	–	–	DECK HOUSE @ FR 16 PORT, AND FR 18 1/2 PORT	28"	–	–	–	–	WOOD	–	RH	
4	1	32 X 54 WT TIGHT DOOR	CEN-TEX MARINE	104 LH	DECK HOUSE @ FR 14 CL	32" X 54"	32 1/4"	54 1/4"	–	22"	STEEL	X	LH	
5	1	24" DIA FLWT EMER ESCAPE HATCH	FREEMAN	2482-0109-0004-24"	MN DK @ FR 13 3/4 PORT	24" DIA	–	–	26.5"	–	DUCTILE IRON	.36	–	
6	2	15" X 23" RAISED BOLTED WT MANHOLE	CEN-TEX MARINE	302-S	HOLD DK MACH SPACE BHD @ FR 15 PORT & STBD	48" X 48"	–	–	–	–	STEEL	–	–	BHD MOUNTED
7	16	18" DIA FLWT MANHOLE	–	–	MN DK @ FR 2, 9, 12, 17 PORT & STBD, HOLD DK @ FR 12 PORT & STBD	18" DIA	–	–	XX"	–	STEEL	X	–	
8	6	18" X 30" WEATHER TIGHT SLIDING WINDOWS	–	–	STATEROOMS, BREAK ROOM & GALLEY	18" X 30"	–	–	–	–	STEEL	–	–	STAINLESS STEEL FRAME
9	1	48" X 48" FLWT HATCH	CEN-TEX MARINE	XX	MN DK @ FR 13 1/2 STBD	48" X 48"	–	–	–	–	STEEL	–	–	WITH SPRING
10	1	32 X 54 WT TIGHT DOOR	CEN-TEX MARINE	104 LH	DECK HOUSE @ FR 18 3/4 STBD	32" X 54"	32 1/4"	54 1/4"	–	22"	STEEL	X	LH	
11	1	INTERIOR JOINER DOOR	–	–	DECK HOUSE @ FR 16 STBD	36"	–	–	–	–	WOOD	–	LH	
12	2	15" X 23" RAISED BOLTED WT MANHOLE	CEN-TEX MARINE	302-S	HOLD DK MACH SPACE BHD @ FR 15 PORT & STBD	48" X 48"	–	–	–	–	STEEL	–	–	BHD MOUNTED
13														
14														
15														

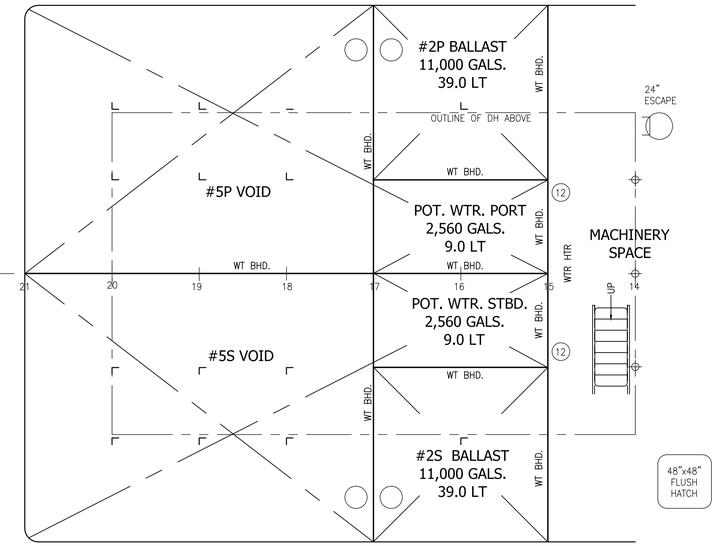

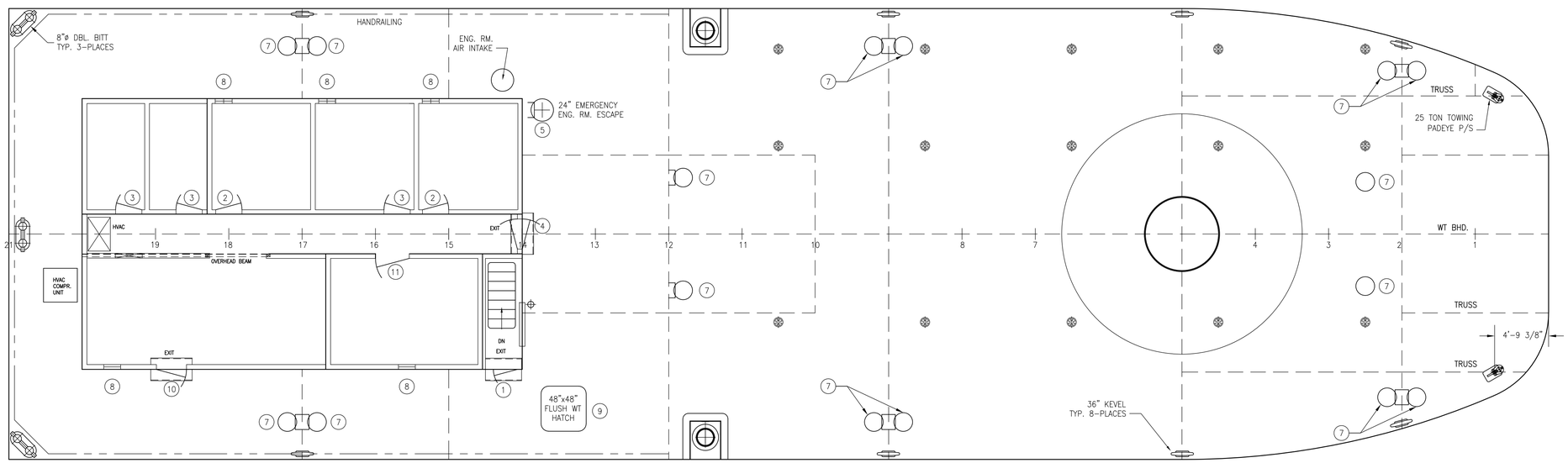

MAIN DECK ARRANGEMENT

REV.	DESCRIPTION	DATE	APPROVED BY
	REVISIONS		

NORTH CAROLINA FERRY SYSTEM
113 ARENDELL STREET MOREHEAD CITY, NC. 28557

NORTH CAROLINA DEPARTMENT OF TRANSPORTATION
FERRY DIVISION

136'-6" x 40' x 9' CRANE BARGE

DOORS, WINDOWS & MH SCHEDULE

DWG. BY:	APPROVED BY:	SIZE	PROJECT NO.	DWG NO.	REV
BT JONES	XXXXXXXXXXXX	D	078	NC-140-12	A
DATE: APRIL 9, 2008	DATE APPROVED:	SCALE 3/16"=1'-0"			SHEET 1 OF 1

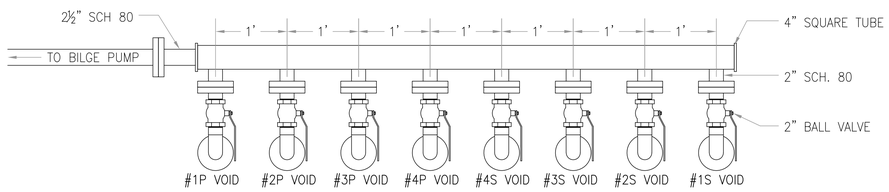

DETAIL 1–7D
FWD BILGE MANIFOLD
SCALE: 1"=1'

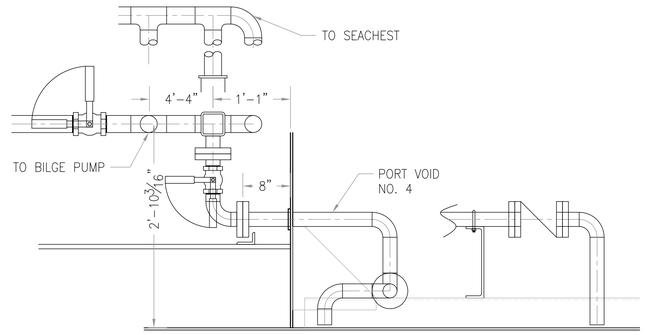

DETAIL 1–4D
FWD BILGE SECTION
SCALE: 1"=1'

BILL OF MATERIALS

ITEM	QTY.	SIZE	DESCRIPTION	MATERIAL	ASTM NO.	REMARKS
1	540'	2"	PIPE – SCH. 80 ERW	STEEL	A53 GR B	
2	60'	2 1/2"	PIPE – SCH. 80 ERW	STEEL	A53 GR B	
3	51	2"	ELBOW – BW SCH. 80 ERW	STEEL	A53 GR B	
4	6	2 1/2"	ELBOW – BW SCH. 80 ERW	STEEL	A53 GR B	
5	2	2 1/2"	TEE – BW SCH. 80 ERW			
6	12	2"	BALL VALVE			
7	3	2 1/2"	BALL VALVE			
8	72	2"	FLANGE – 150# RAISED FACE SLIP-ON			
9	0	2 1/2"	FLANGE – 150# RAISED FACE SLIP-ON			
10	12	2"	VALVE – SWING CHECK – 125#			
11	1	2 1/2"	STRAINER – DUPLEX 125# FLANGED			
12	11'	4"	SQUARE TUBE			
13	12	2 1/2"	DUPLEX STRAINER			

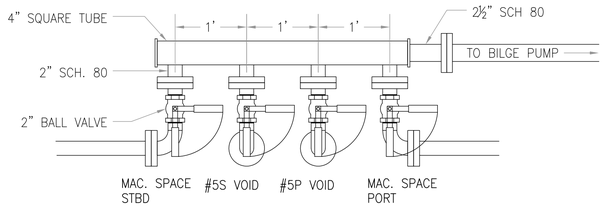

DETAIL 1–5C
AFT BILGE MANIFOLD
SCALE: 1"=1'

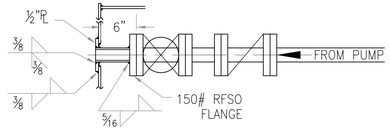

DETAIL 1–5C
OVERBOARD
SCALE: 1"=1'

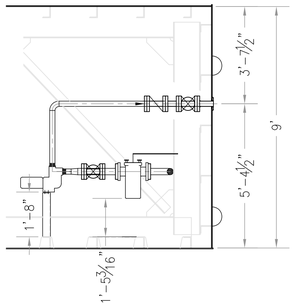

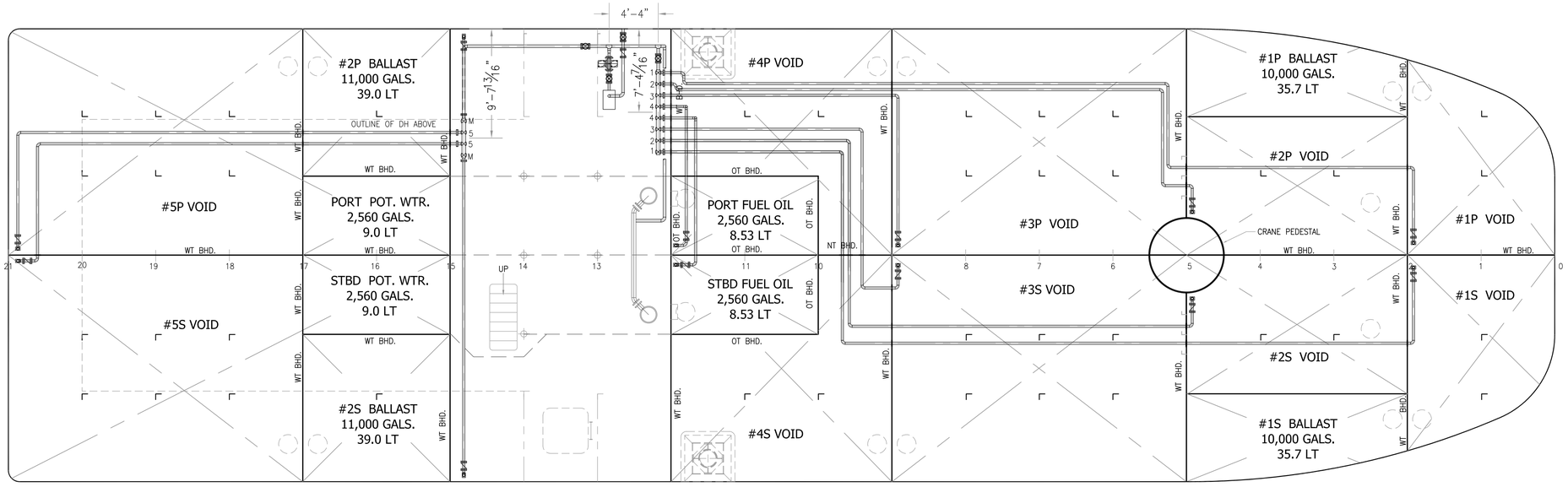

HOLD PLAN

REV.	DESCRIPTION	DATE	APPROVED BY

REVISIONS

NORTH CAROLINA FERRY SYSTEM
8550 SHIPYARD RD. MANNS HARBOR, NC 27953

NORTH CAROLINA DEPARTMENT OF TRANSPORTATION
FERRY DIVISION

136'-6" x 40' x 9' CRANE BARGE
BILGE, BALLAST
& FIRE PIPING

DWG. BY:	APPROVED BY:	SIZE	PROJECT NO.	DWG NO.	REV
B.T. JONES	X	D	078	NC-140-18	-
DATE: MAY 15, 2008	DATE APPROVED:	SCALE 3/16"=1'-0"			SHEET 1 OF 2

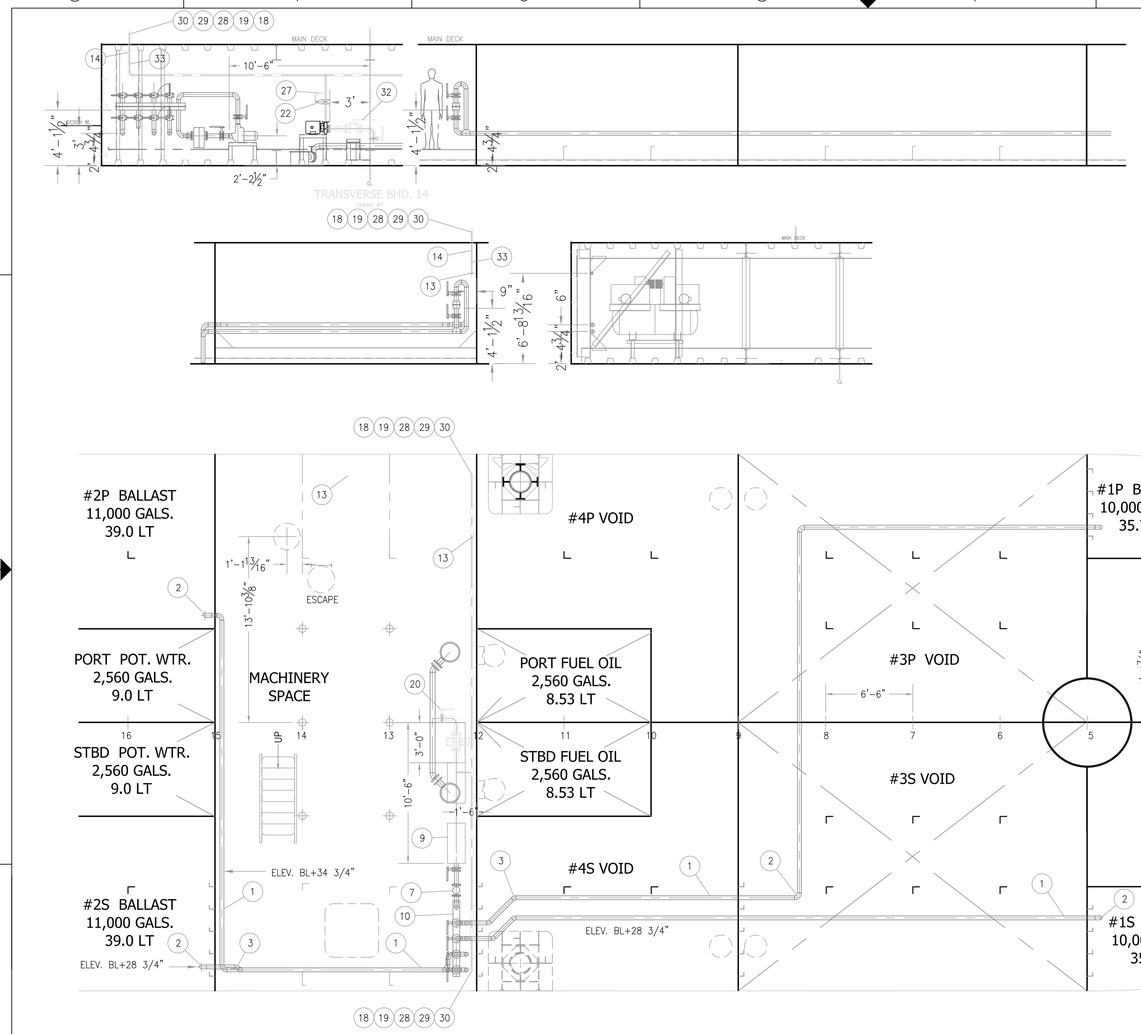

HOLD PLAN

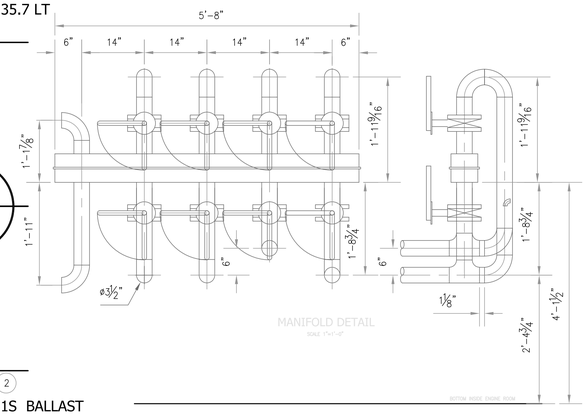

BILL OF MATERIALS

ITEM	QTY.	SIZE	DESCRIPTION	MATERIAL	ASTM NO.	REMARKS
1	210'-0"	3	PIPE, SCH. 80 ERW	STEEL	ASTM A-53 GR. B	
2	40	3	90 ELBOW, SCH. 80 BW	STEEL	ASTM A-105	
3	6	3	45 ELBOW, SCH. 80 BW	STEEL	ASTM A-105	
4	4	3	TEE, SCH. 80 BW	STEEL	ASTM A-105	
5	20	3	FLANGE, 150 RFSO	STEEL	ASTM A-105	
6	8	3	VALVE, LUG TYPE BUTTERFLY 200#	CI	ASTM A-126	
7	1	3	STRAINER, SIMPLEX SIMPLEX FLANGED	CI	ASTM A-126	
8	1	2 1/2"	GAGE, 0-100# 1/4" NPT CONNECTION	STN STL	ASTM 300 SERIES	
9	1	3"x2"	CENTRIFUGAL PUMP W/10 HP MTR.			AURORA MODEL 341
10	5'-8"	6"x6"	RECTANGULAR TUBING	STEEL	ASTM A-36	
11	40	3"	PIPE, SCH. 80 ERW			
12	3	2 ½"	PIPE, SCH. 80 ERW			
13	3	2"	PIPE, SCH. 80 ERW			
14	3	1 ½"	PIPE, SCH. 80 ERW			
15	3	3"	90 ELBOW, SCH. 80 BW			
16	3	2 ½"	90 ELBOW, SCH. 80 BW			
17	3	2"	90 ELBOW, SCH. 80 BW			
18	3	1 ½"	CPLG, 3000# FS SCWD			
19	2	1 ½"	FIRE HOSE VALVE - ANGLE GLOBE			
20	1	3"	GATE VALVE - IBBM FLG			
21	1	3"	SWING CHECK VALVE - IBBM FLG			
22	2	2"	GATE VALVE - BRZ. SCWD UNION BONNET			
23	2	2"	UNION - 150# SCWD			
24	4	3"	FLANGE - 150# RESO			
25	2	2 ½"	FLANGE - 150# RESO			
26	4	2"	FLANGE - 150# RESO			
27	1		PRESSURE GAGE			
28	2	1½"x50'	FIRE HOSE			
29	2	1 ½"	DUAL PURPOSE FIRE NOZZLE			
30	2		SPANNER WRENCH			
31	2		HOSE STORAGE RACK			
32	1	3"	SIMPLEX FLG. BASKET STRAINER			
33	2	2x1½"	BELL REDUCER - SCWD			

REV.	DESCRIPTION	DATE	APPROVED BY

REVISIONS

NORTH CAROLINA FERRY SYSTEM

NORTH CAROLINA DEPARTMENT OF TRANSPORTATION
FERRY DIVISION

136'-6" x 40' x 9' CRANE BARGE
BALLAST & FIRE PIPING

DWG. BY: JOE WALDREP	APPROVED BY: DON CHAPMAN	SIZE D	PROJECT NO. 078
DATE: JUNE 1, 2008	DATE APPROVED:	SCALE 1/4"=1'-0"	DWG NO. NC-140-18
			REV -
			SHEET 2 OF 2

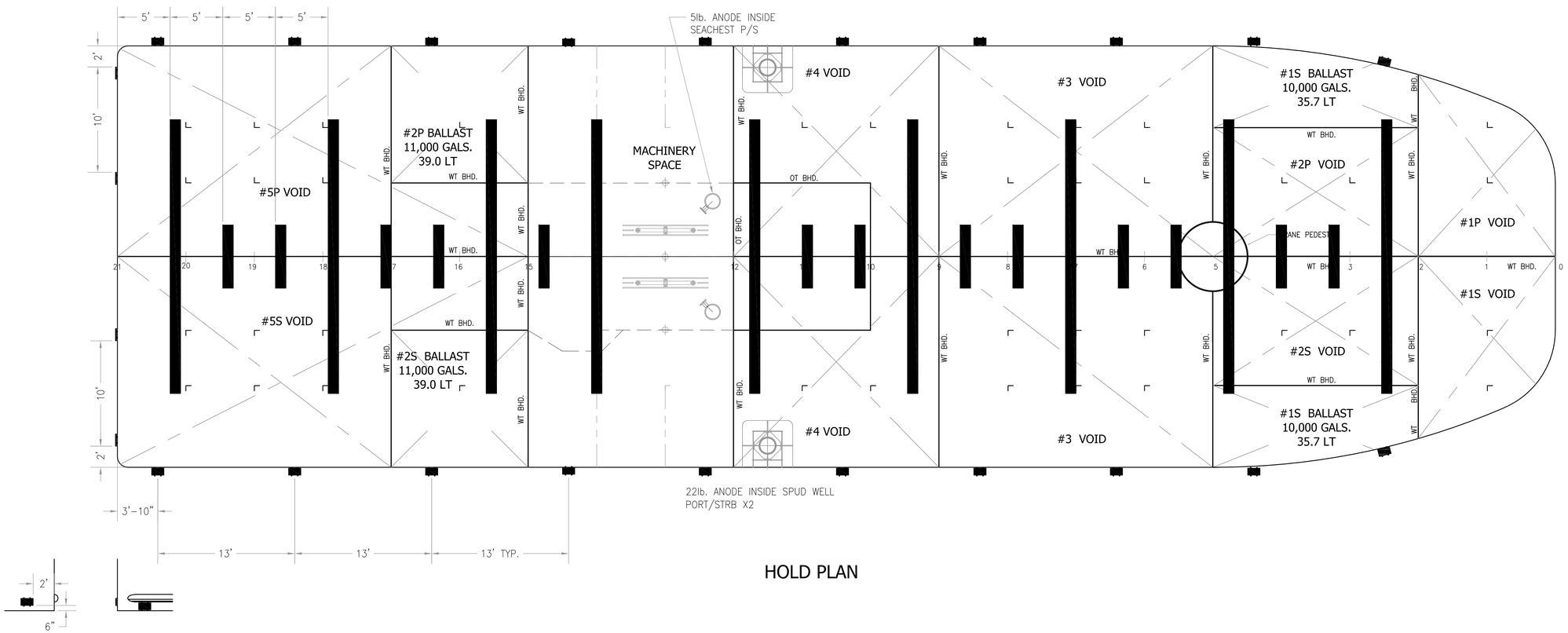

HOLD PLAN

REV.	DESCRIPTION	DATE	APPROVED BY
	REVISIONS		

NORTH CAROLINA FERRY SYSTEM
113 ARENDELL STREET MOREHEAD CITY, NC. 28557

NORTH CAROLINA DEPARTMENT OF TRANSPORTATION
FERRY DIVISION

136'-6" x 40' x 9' CRANE BARGE

DOCKING PLAN

DWG. BY:	APPROVED BY:	SIZE	PROJECT NO.	DWG NO.	REV
B.T. JONES	X	D	078	NC-140-35	-
DATE: MAY 30, 2008	DATE APPROVED:	SCALE 3/16"=1'-0"			SHEET 1 OF 1

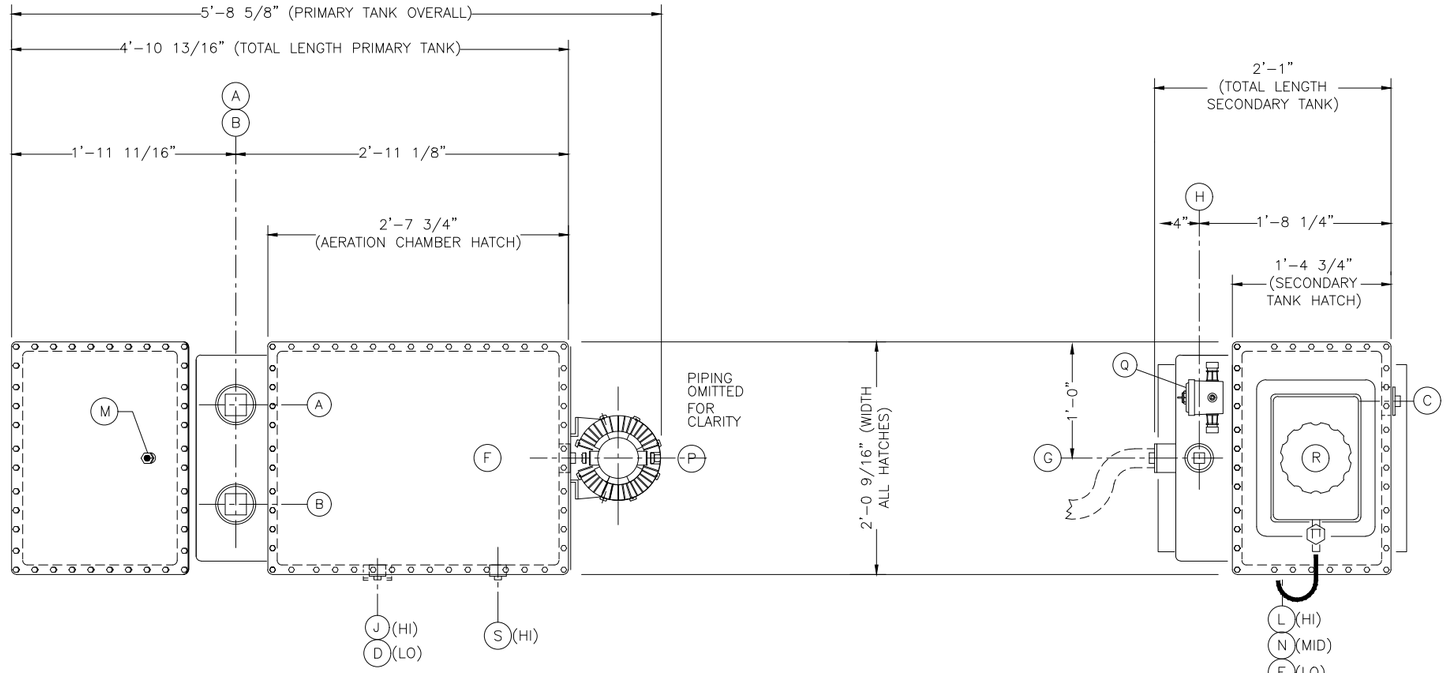

PLAN VIEW AT PRIMARY TANK

PLAN VIEW AT SECONDARY TANK

EXPLANATION OF COMPONENTS

MARK	DESCRIPTION
A	INLET LINE – 3" FNPT – PVC SCH 80
B	AERATION/MEDIA CHAMBER VENT – 3" FNPT – PVC SCH 80
C	PUMP DISCHARGE – 2" FNPT – PVC SCH 80
D	AERATION CHAMBER DRAIN – 2" FNPT – PVC SCH 80
E	CHLORINATION CHAMBER DRAIN – 2" FNPT – PVC SCH 80
F	CLARIFIED OUT – 2" FNPT – PVC SCH 80
G	CLARIFIED IN – 2" FNPT – PVC SCH 80
H	CHLORINATION TANK VENT – 2" FNPT – PVC SCH 80
J	AIR INLET – 1" FNPT – VALVES AND FITTINGS – PVC SHC 80
K	-------
L	CHLORINE INJECTION CONNECTION – 3/4" FNPT – PVC SCH 80
M	MEDIA FILL/VENT – 1/2" FNPT – PVC SCH 80 W/ BRONZE BALL VALVE
N	SAMPLE VALVE CONNECTION – 3/8" FNPT – PVC SCH 80
P	REGENERATIVE BLOWER (REMOTELY LOCATED)
Q	DISCHARGE PUMP HAND/OFF/AUTOMATIC SWITCH
R	CHEMICAL TANK
S	SHUT-DOWN CLEAR WATER PURGE– 1" FNPT W/ BRONZE BALL VALVE

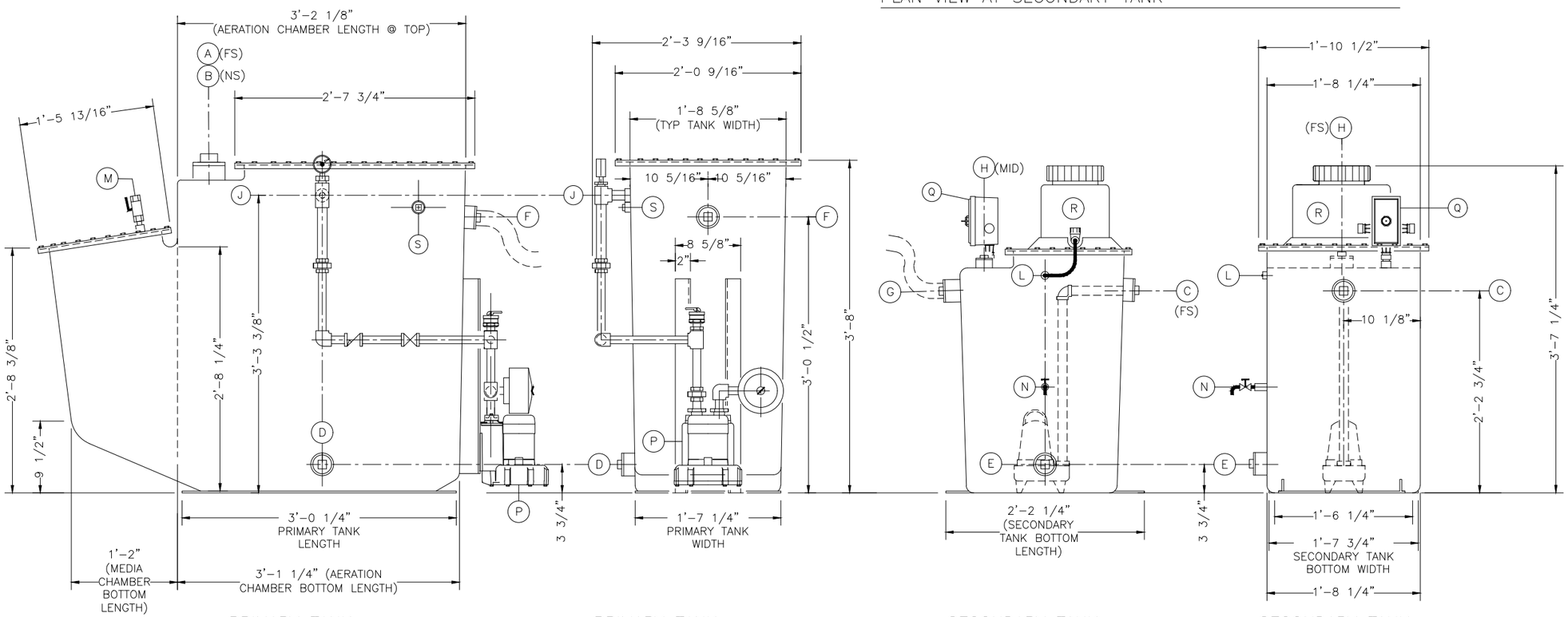

PRIMARY TANK SIDE ELEVATION

PRIMARY TANK BLOWER END ELEVATION

SECONDARY TANK SIDE ELEVATION

SECONDARY TANK BLOWER END ELEVATION

This drawing is the exclusive property of: **RED FOX ENVIRONMENTAL SERVICES, INC.**
It is furnished on a confidential basis.No portion of this drawing may be copied,traced, photographed or in any other way reproduced; nor may any item hereon depicted be manufactured or shown without the written consent of: redfox

MODEL: RF 350 FP–FG
MARINE SANITATION DEVICE TYPE II
U.S.C.G. CERTIFICATION NUMBER: 159.015/0663/0

BY: redfox ENVIRONMENTAL SERVICES, INC.

FOR: DETROIT CHILE
RF 350 FOX PAC (FIBERGLASS)
WITH PUMP DISCHARGE
GENERAL ARRANGEMENT

PROJECT MANAGER CORDNTR	MU	CAD DWR	BMR
FAB JOB NUMBER	R 1779	DATE: MAR/01/2009	
ENG. W.O. NUMBER	21823	SCALE: 3/4"= 1'-0"	
ENGRNG CAD FILE NUMBER	00 000 GA 001	REVISION NUMBER	0

REV. NO.	DATE	REVISION DESCRIPTION	DWG. BY:	APRV'D:
0	11/13/08		BMR	GBM